WIENER GTV DESIGN

ARCH DINING TABLE

TECHNISCHES BLATT
SCHEDA TECNICA
DATA SHEET
FICHE TECHNIQUE

ARCH DINING TABLE

DESIGN FRONT, 2014

Tisch mit Gestell aus Buchenbugholz und Tischplatte aus offenporig lackierter furnierter Esche.
In zwei Größen verfügbar.

Tavolo con struttura in faggio curvato e piano impiallacciato in frassino verniciato a poro aperto.
Disponibile in due dimensioni.

Table with bent beech-wood frame and open pore painted ash-wood veneer top. Available in two sizes.

Table avec structure en hêtre cintré et plateau en plaqué frêne verni à pores ouverts. Disponible en deux dimensions.

Mesa con estructura de haya curvada y parte superior chapada en fresno barnizado a poro abierto.
Disponible en dos tamaños.

TVDT18LGN
Dimensions mm.
height 740 | width 1800 | depth 1000

TVDT22LGN
Dimensions mm.
height 740 | width 2200 | depth 1000

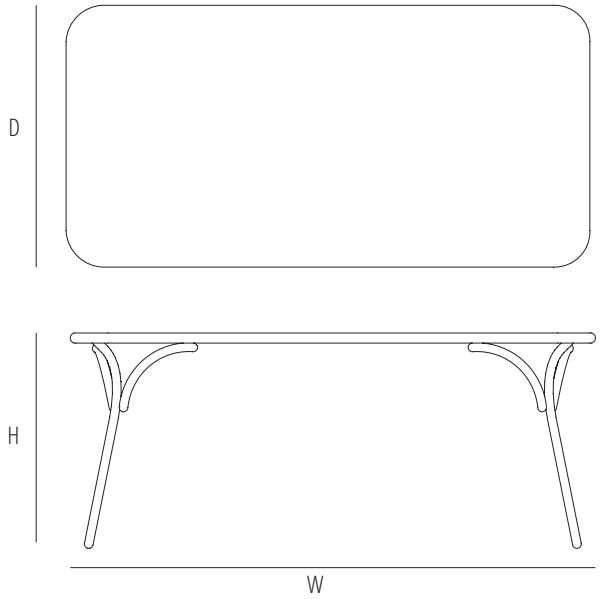

	H	W	D	TH	AH
mm	740	1800	1000		
inch	29,1	70,8	39,3		

2

max. 1

BASE
0,39

TOP
0,29

30

35

BASE
mm - inch
h 960 - 37,7
w 750 - 29,5
d 540 - 21,2

TOP
mm - inch
h 1850 - 72,8
w 1050 - 41,3
d 150 - 5,9

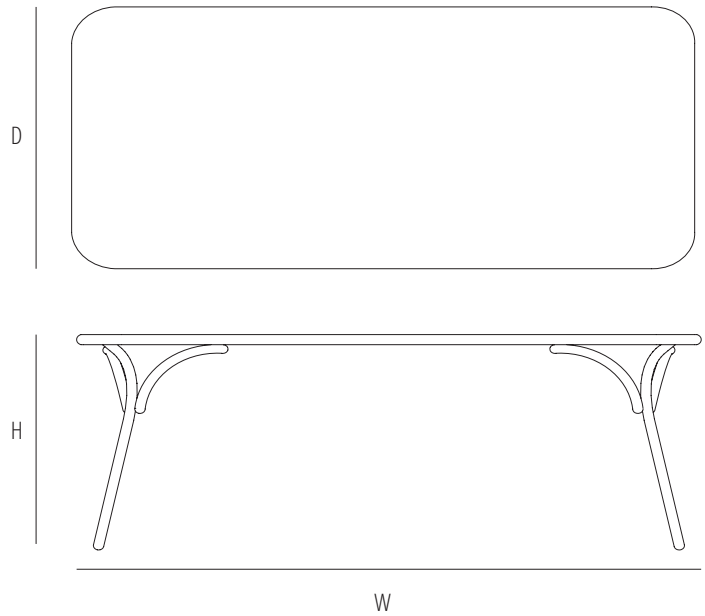

	H	W	D	TH	AH
mm	740	2200	1000		
inch	29,1	86,6	39,3		

2

max. 1

BASE
0,39

TOP
0,35

40

45

BASE
mm - inch
h 960 - 37,7
w 750 - 29,5
d 540 - 21,2

TOP
mm - inch
h 2250 - 88,5
w 1050 - 41,3
d 150 - 5,9

Verfuegbare Ausfuehrungen
Finiture disponibili
Available finishes
Finitions disponibles

TWO TONE: 1° version

TOP

C01 - RAL 9005 BLACK

BASE

B03 DARK WALNUT
B03 NOCE SCURO

TWO TONE: 2° version

TOP

C02 - RAL 9010 PURE WHITE

BASE

B01 BEECH
B01 FAGGIO

TWO TONE: 3° version

TOP

B07 ASH
B07 FRASSINO

BASE

B01 BEECH
B01 FAGGIO

ONE TONE

STAINS / TINTI

B03 DARK WALNUT
B03 NOCE SCURO

B04 WENGÈ
B04 WENGÈ

CLASSIC LACQUER / LACCATO CLASSICO

*Ash wood is open-pore painted
* L'essenza frassino è verniciata a poro aperto

C01 - RAL 9005 BLACK

C02 - RAL 9010 PURE WHITE

CONTEMPORARY LACQUER / LACCATO CONTEMPORANEO

*Ash wood is open-pore painted
* L'essenza frassino è verniciata a poro aperto

D01 - RAL 1013 PEARL WHITE

D02 - RAL 7047 TELEGREY 4

D03 - RAL 7030 STONE GREY

D19 - S7502 G DARK GREY

D21 - S1510 Y80R POWDER PINK

D29 - S3060 Y60R RED ORANGE

D26 - S3560 Y80R CARMINE RED

D14 - RAL 3005 WINE RED

D30 - S3030 B PASTEL BLUE

D11 - RAL 7000 SQUIRREL GREY

D12 - RAL 7031 BLUE GREY

D25 - RAL 5011 STEEL BLUE

D15 - RAL 5020 OCEAN BLUE

D27 - S1050 Y10R MELON YELLOW

D28 - S2050 C90Y CAMPUS GREEN

D23 - S6020 G10Y DARK GREEN

ARCH DINING TABLE assembly instructions

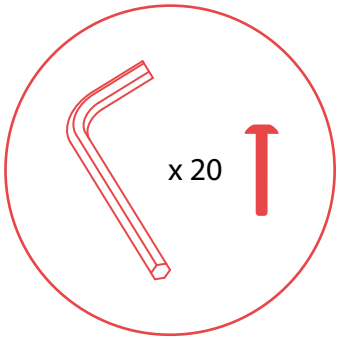

Allen key not included
Allen key number 4

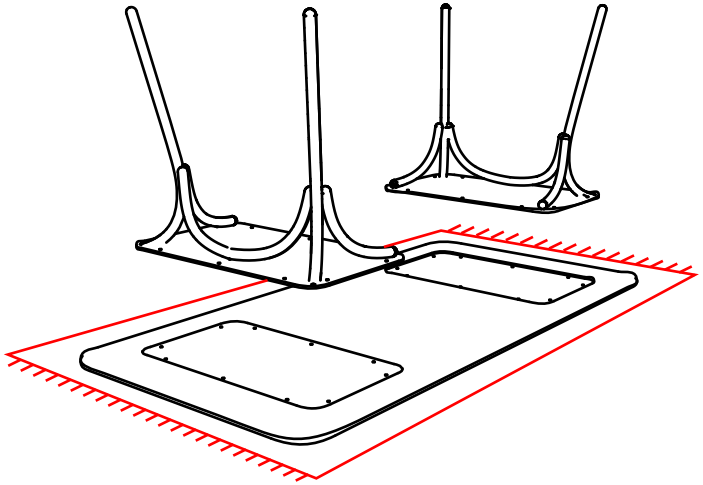

1

place a clean cloth under the table top to prevent it from scratching

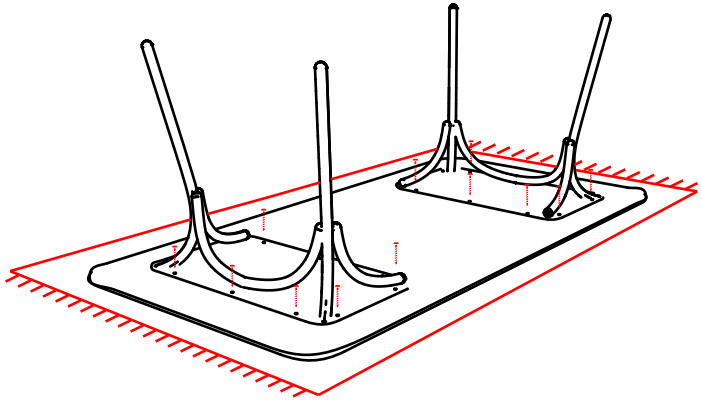

2

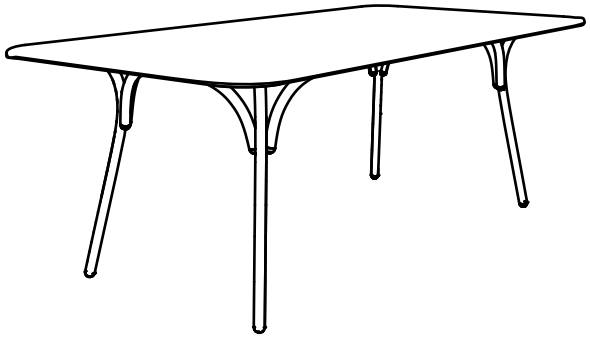

3

WIENER
·GTV·
DESIGN

Gebrüder Thonet Vienna GmbH
Prinz Eugen Straße 42
1040 Wien (AT)

www.gebruederthonetvienna.com

Offices of the trademarks' licensee
Production Furniture International S.p.A.
Via Foggia, 23/H
10152 Torino (TO) Italy
Phone: 0039 011 0133330 - info@gebruederthonetvienna.com